REV	NO.	ZONE	ORIG	NEW	OLD
09				INTRODUCTION DUAL HALL WIRE	
		CZO		CIRCUIT DIAGRAM CHANGED	
		DIT		FIER W: (A) X2-4 (B) X2-3 (+) X2-2 (-) X2-1 / (A) 3 (B) 4 (+) 8 (-) 6	
		LZR		MAX. 0.8 / MAX. 3	
		KZO		OUTPUT SIGNAL SEQUENCE AT CCW ADDED	
		EZA		MOTOR CURVE TYPE: P=PRELIMINARY D=DELIVER	

VORZUGSDREHRICHTUNG
PRIORY DIRECTION OF ROTATION

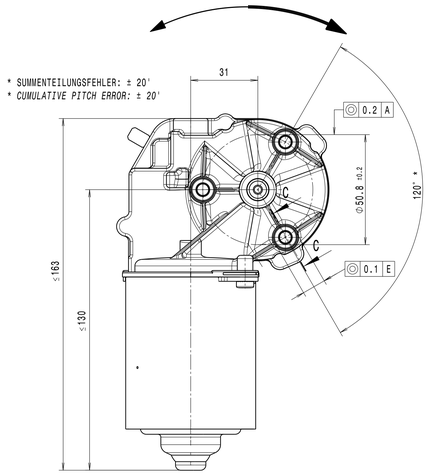

* SUMMENTEILUNGSFEHLER: ± 20'
* *CUMULATIVE PITCH ERROR: ± 20'*

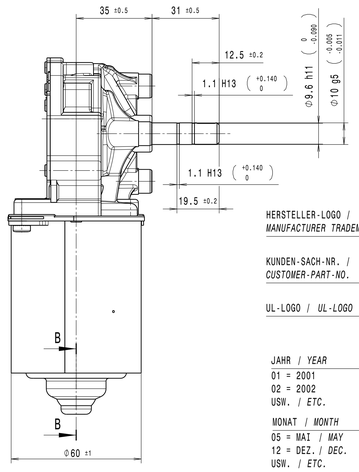

OE — AUSGANGSSIGNAL REIHENFOLGE BEI CCW
OUTPUT SIGNAL SEQUENCE AT CCW

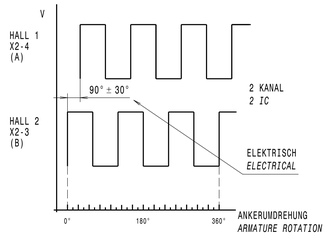

OE — *CIRCUIT DIAGRAM*

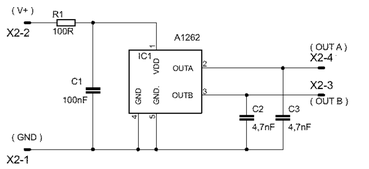

DATEN HALL IC -2 KANAL
DATA OF HALL IC -2 SIGNAL CHANNEL

SPANNUNGSBEREICH: Up = 4.5-24V
VOLTAGE RANGE
STROMAUFNAHME: ≤ 30 mA
CURRENT CONSUMPTION
TEMPERATURBEREICH: = -20 °C - +60°C
TEMPERATURE RANGE

AUSGANG: = 3 IMPULSE PRO UMDREHUNG DER ANKERWELLE
OUTPUT: = 3 PULSE PER REVOLUTION OF ARMATURE

AUSGANGSSIGNAL
OUTPUT SIGNAL

AUSGANG: = OFFENER KOLLEKTOR
OUTPUT = OPEN COLLECTOR

SAETTIGUNGSSPANNUNG: UCESAT ≤ 0.4V = ULOW
SATURATION VOLTAGE: UCESAT ≤ 0.4V = ULOW

NIEDERVOLT-AUSGANGSSPANNUNG BEI = 26mA
LOW LEVEL OUTPUT VOLTAGE AT Ia = 26mA

TASTVERHAELTNIS DER AUSGANGSSIGNALE : 50% ± 25%
PULS DUTY FACTOR OF OUT-PUT SIGNAL

RISE AND FALL TIME >=25mV/ µs BEI KUNDENAUSSENBESCHALTUNG
RISE AND FALL TIME >=25mV/ µs AT CUSTOMER OUTSIDE PROTECTIVE CIRCUIT

EINSCHALTVERZOEGERUNG: 150ms BEI 3.8V
ON TIME DELAY: 150 ms AT 3.8V

SCHALTFOLGE: BEI CCW HALL 2 PIN 4 GEFOLGT VON HALL 1 PIN 3
SWITCHING SEQUENCE: ON CCW HALL 2 PIN 4 FOLLOWED BY HALL 1 PIN 3

KOHLEQUALITAET 09
BRUSH QUALITY 09

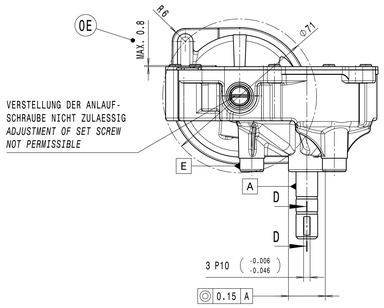

SCHALTBILD
CIRCUIT DIAGRAM

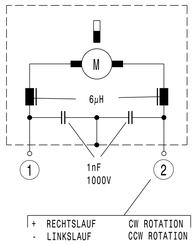

D-D
2:1

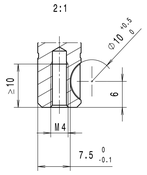

** ○ MESSPUNKTE KENNLINIE
○ *MEASURE POINTS GRAPH*

OE
MOTORKENNLINIE PRUEFSPANNUNG Up= 24V
MOTOR CURVE *TEST VOLTAGE Up= 24V*

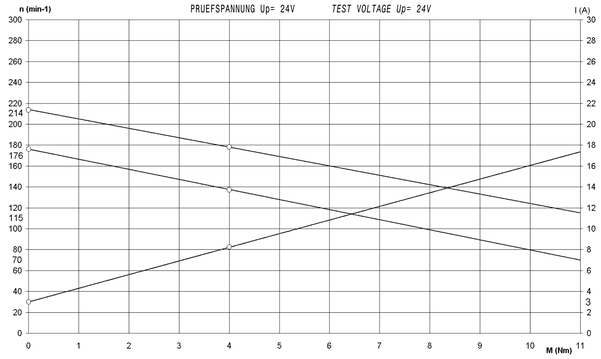

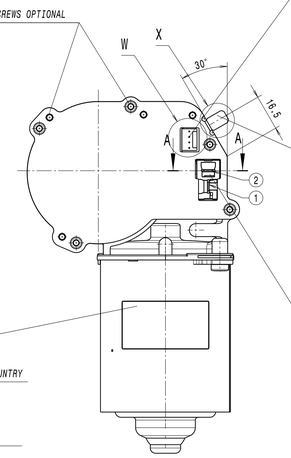

DECKELBEFESTIGUNG WAHLWEISE
GENIETET ODER GESCHRAUBT
COVER FIXING RIVETS OR SCREWS OPTIONAL

HANDHABUNGSHINWEIS IM BEREICH DES HALL-IC STECKERS: MOTOR DARF NICHT AUF DECKELSEITE GELAGERT WERDEN, AUF GRUND BESCHAEDIGUNGSGEFAHR DES HALL-IC STECKER PINS.
NOTE FOR HANDLING IN AREA OF HALL-IC-CONNECTOR: STORAGE OF MOTOR ON COVER SIDE IS NOT PERMISSIBLE, DUE TO RISK OF DAMAGING THE HALL-IC CONNECTOR PINS.

FLACHSTECKER 6.3 x 0.8
NACH SWF 43.101 DIN 46244
DICKE 0.9-0.1
MALE SPADE TERMINAL 6.3 x 0.8 TO SWF 43.101 DIN 46244 THICKNESS 0.9-0.1

GEGENSTECKER EMPFEHLUNG
RECOMMENDATION OF MATING PART
RSB 8240.158.F 1.5-6.3
FA.STOCKO

FLACHSTECKER (DIN 46244) 6,3x0,8
GEGENSTECKER/TYCOELECTRONICS-AMP
STECKERGEHAEUSE: SACHNUMMER 180907 (ZEICHNUNGSNUMMER C-180907)
FLACHSTECKHUELSE (DIN 46247): SACHNUMMER x-160526-x (ZEICHNUNGSNUMMER C-160526)
FLACHSTECKHUELSE (DIN 46247): SACHNUMMER 925603-x (ZEICHNUNGSNUMMER 925603)-(REDUZIERTE STECKKRAFT)
FUER LEITUNGSQUERSCHNITT 0,5-1,5mm ²

FLAT PLUG (DIN 46244) 6,3x0,8
MATING CONNECTOR/TYCOELECTRONICS-AMP
RECEPTACLE HOUSING: PART NO 180907 (DRAWING NO C-180907)
RECEPTACLE FOR TABS (DIN 46247): PART NOx-160526-x (DRAWING NO C-160526)
RECEPTACLE FOR TABS (DIN 46247): PART NO 925603-x (DRAWING NO 925603)-(REDUCED INSERTION FORCE);
FOR CONDUCTOR CROSS SECTION 0,5-1,5mm ²

W
2:1

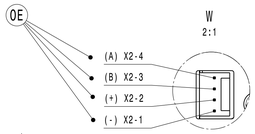

MAS-CON STECKER-NR.: MLAS 100
GEGENSTECKER PANDUIT-NR.: CE100 F22-04
FUER LEITERQUERSCHNITT AWG: 22
MAS-CON PLUG-NO.: MLAS 100
PLUG CONNECTION PANDUIT-NO.: CE100 F22-04
FOR CONDUCTOR CROSS SECTION AWG: 22

2:1

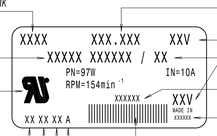

HERSTELLER-LOGO / *MANUFACTURER TRADEMARK*
KUNDEN-SACH-NR. / *CUSTOMER-PART-NO.*
UL-LOGO / *UL-LOGO*
HERSTELLER-SACH-NR. / *MANUFACTURER-PART-NO.*
MOTORSPANNUNG OPTIONAL / *MOTOR VOLTAGE OPTIONAL*
KUNDEN-INDEX / *CUSTOMER-INDEX*
EMV-HINWEIS / *EMC-NOTE*
HERSTELLUNGSLAND / *MANUFACTURING COUNTRY*
BARCODE 2/5 / *INTERLEAVED 2/5*
INTERNE SCHICHTKENNZEICHNUNG / *INTERNAL SHIFT WORK IDENTIFICATION*
A = FRUEHSCHICHT /*MORNING SHIFT*
B = SPAETSCHICHT /*EVENING SHIFT*
C = NACHTSCHICHT /*NIGHT SHIFT*
JAHR / *YEAR*
01 = 2001
02 = 2002
USW. / *ETC.*
MONAT / *MONTH*
05 = MAI / *MAY*
12 = DEZ. / *DEC.*
USW. / *ETC.*
TAG / *DAY*
11
12
USW. / *ETC.*

Y
5:1

FLACHSTECKERENDE AM GERAET
AEHNLICH SWF 43.101 DIN 46244
MALE SPADE TERMINAL
SIMILAR SWF 43.101 DIN 46244

X
5:1

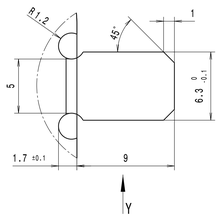

A-A
2:1

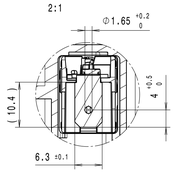

B-B
2:1

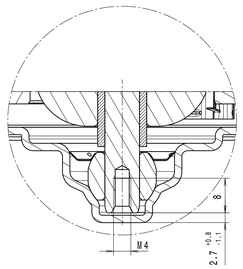

C-C (3x)
2:1

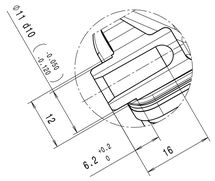

BEFESTIGUNGSLOECHER FUER SELBSTFORMENDE SCHRAUBEN M6, POWER LOK GEWINDE DIN ISO 965-2, MAX. ZULAESSIGES ANZUGSMOMENT DER BEFESTIGUNGSSCHRAUBE 13Nm
FASTENING HOLES FOR SELF-FORMING SCREWS M6, POWER LOK THREAD DIN ISO 965-2, MAX. PERMISSIBLE TORQUE FOR FASTENING SCREW 13 Nm

VERZAHNUNGSDATEN — *GEAR TOOTH DATA*

UEBERSETZUNG	*RATIO*	i	=	1:26.5
GANGZAHL	*NO. OF STARTS*	z1	=	2
ZAEHNEZAHL	*NO. OF TEETH*	z2	=	53
NORMALMODUL	*NORMAL MODULE*	mn	=	1
ZAHNRADMATERIAL	*GEAR WHEEL MATERIAL*		=	DELRIN 100

MAX. GETRIEBEFESTIGKEIT STATISCH : 24Nm
MAX. STATIC GEAR STRENGTH

WERKSTOFF MOTORTOPFLAGER : SINTERBRONZE
MATERIAL OF MOTOR HOUSING BEARING : BRONZE

A) GENERAL
1. *NOMINAL VOLTAGE*
2. *NO LOAD SPEED*
3. *NO LOAD CURRENT*
4. *STALL CURRENT*
5. *STARTING TORQUE*
6. *RFI SUPPRESSION*
7. *THERMAL SWITCH*
8. *ISOLATION TEST*
9. *SELF LOCKING STATIC*
10. *RADIAL LOAD ON DRIVE SHAFT*
11. *AXIAL LOAD ON DRIVE SHAFT*
12. *NOISE LEVEL*
13. *AMBIENT TEMPERATURE*
14. *ENCLOSURE CLASS*
15. *VIBRATION*

B) RUNNING DATA
OPERATING TORQUE (NOM. LOAD)
CURRENT LIMIT

C) LIFE TEST
1. *CYCLE (DEFINITION)*
2. *TEST VOLTAGE*
3. *TEST TORQUE*
4. *TEST TEMPERATURE*
5. *EXTERNAL COOLING*
6. *MIN. LIFE TIME*
7. *PERFORMANCE AFTER LIVE TEST*

D) OTHER VALID DOCUMENTS
1. *GEN. SPECIFICATION INDUSTR.- MOTORS NIDEC ACC. SWF 46.402 (EDITION AT 09.04.1998) ADDITIONAL REQUIREMENTS, WHICH ARE NOT CONTENT OF THE ABOVE SPECIFICATION, HAVE TO BE SECURED BY THE CUSTOMER. FOR THIS ADDITIONAL REQUIREMENTS NIDEC CAN TAKE NO PRODUCT LIABILITY.*

A) ALLGEMEINES
1. NENNSPANNUNG UP = 24 V DC
2. LEERLAUFDREHZAHL n0 = 176-214MIN-1
3. LEERLAUFSTROM I0 ≤ 3 A
4. BLOCKIERSTROM Ik > 26 A
5. BLOCKIERMOMENT MA ≥ 15 Nm
6. ENTSTOERBAUTEILE = SIEHE DIAGRAMM / *SEE DIAGRAM*
7. THERMOSCHALTER = NA
8. ISOLATIONSPRUEFUNG = 850V DC FUER 1 SEC. */ FOR 1 SEC.*
9. GETRIEBEHEMMUNG STATISCH = NA
10. RADIALBELASTUNG DER ABTRIEBSWELLE F = 80 N IN 25MM ABSTAND VOM GETRIEBEGEHAEUSE */DISTANCE OF GEARHOUSING*
11. AXIALBELASTUNG DER ABTRIEBSWELLE F = 15 N
12. GERAEUSCHPEGEL = NA
13. UMGEBUNGSTEMPERATUR = -30°BIS +60°C
14. SCHUTZART IP = 30
15. VIBRATION = NA

B) BETRIEBSDATEN
NENNMOMENT (NENNLAST) MN = 4 Nm CW+CCW
STROMBEGRENZUNG = NA

C) LEBENSDAUERPRUEFUNG
1. ZYKLUS (DEFINITION) = AUF (CW) 20SEC. - PAUSE 40SEC./ *ON (CW) 20SEC. - BREAK 40SEC.*
   ZU (CCW) 20SEC. - PAUSE 40SEC./ *OFF (CCW) 20SEC. - BREAK 40SEC.*
2. PRUEFSPANNUNG = 24 V DC
3. PRUEFMOMENT = 4 Nm MIT RADIALLAST */WITH RADIAL LOAD*
4. PRUEFTEMPERATUR = RT
5. FREMDKUEHLUNG = ZUR VERKUERZUNG DER PAUSEN ZULAESSIG */BY REDUCTION THE BREAKS PERMISSIBLE*
6. MIN. LEBENSDAUER = 30 000 ZYKLEN / *30 000 CYCLES*
7. LEISTUNG NACH LEBENSDAUERTEST = ABWEICHUNG BIS 10% ZULAESSIG/ *DIFFERENCE TILL 10% PERMISSIBLE*

D) MITGELTENDE UNTERLAGEN
1. ALLG. SPEZIFIKATION INDUSTRIEMOTOREN NIDEC NACH SWF 46.402 (AUSGABE VOM 09.04.1998) DARUEBERHINAUS GEHENDE ANFORDERUNGEN HAT DER KUNDE DURCH PRUEFUNGEN IM SYSTEM SICHERZUSTELLEN. HIERFUER UEBERNIMMT NIDEC KEINE HAFTUNG.

** 100% PRUEFUNG KONTROLLPLAN NA | NICHT ANGEWENDET
** *100% CHECKING CONTROL PLAN* *NOT APPLICABLE*

SYSTEM CHANGE:
10000011264 REPLACED BY M0061808_A00

SAMPLING AND RELEASE ACCORDING TO HQ-G-C2-04 AND NMA SUPPLIER MANUAL

SURFACE TEXTURE ACC. TO DIN EN ISO 1302		EDGES ACC. TO ISO 13715				
GEOMETRICAL PRODUCT SPECIFICATIONS (GPS) SIZE ISO 14405 (E)		GEO. TOLERANCING ACC. TO DIN EN ISO 1101				
LIMIT DIMENSIONS FOR NOMINAL SIZE RANGES IN mm	...6	>6...30	>30...120	>120...400	>400....1000	
TOLERANCES FOR NOMINAL SIZE RANGES IN mm ±	0.1	0.2	0.3	0.5	0.8	
LIMIT DIM. FOR NOMINAL SIZE RANGES IN mm (SHORTER ANGLE SIDE)		...10	>10...50	>50...100	>100	
TOLERANCES FOR NOMINAL SIZE RANGES ±		1°	30'	20'	10'	

CD	CONTROL DIMENSION (CD)	0
SPECIAL PRODUCTS AND PROCESS CHARACTERISTIC		
SC	Safety Regulation Characteristics (SRC)	0
◆	Significant Characteristics (SC)	0
△	Functional Characteristics (FC)	0
VPC	Process Characteristics (PC)	0

NO.	DRAWING NO.	PART NAME	NOTE	QTY.	UNIT	REMARKS
		REQUIREMENT ITEM / REQUIREMENT STANDARD				APPLICABLE STAND / NIDEC SPEC.
		MATERIAL				
		TOLERANCE				
		SURFACE TREATMENT				
		SURFACE FINISH				
		GEOM. TOLERANCING ACC. TO:				

NIDEC has proprietary rights in the material disclosed herein. This drawing and/or technical information is issued in confidence for engineering information only and may not be used to manufacture anything shown or referred to hereon without direct permission from NIDEC. This drawing and/or technical information is loaned for mutual assistance and is subject to return at request of NIDEC at any time.
THIS DRAWING AND/OR TECHNICAL INFORMATION IS THE PROPERTY OF NIDEC.

DRAWING STATUS	RELEASED DATE	DESIGN RESP.		MATERIAL NO.	NMA	405-666-99-99
MASS PRODUCTION	2022-08-22	NMAC	CATIA V5			

REV.	APPROVED	E.C.O NO.	J2GEC0224004	APPROVED	PLRADM	2021-10-08	ARTICLE NO.	0266
				CHECKED	PLRADM	2021-10-08		
		G.KIEHNLE	2022-08-19	DESIGNED	PLRADM	2019-10-07		
		DESIGNED	M.JAUCH	DRAWN	PLRADM	2021-10-08	TITLE	MOTOR DC63!

PROJECTION METHOD: THIRD ANGLE PROJECTION / FIRST ANGLE PROJECTION

Nidec — All for dreams

MODEL NO.				REVISION NO.
DRAWING NO.	M0061808_A00			0 OE
MASS.	UNIT	SCALE	PAGE	SIZE
TBD	mm	1 : 1	1 OF 1	A0