N10699689 EVAC ONLINE PUMP FX30, 230V/50HZ, 400V/50HZ, 460V/60HZ

N10741739
MOTOR

6547204
WEARING PLATE KIT:

Cover plate (x1)

Screws M8x16 (x2)

Cover plate (x1)

Screws M6x10 (x2)

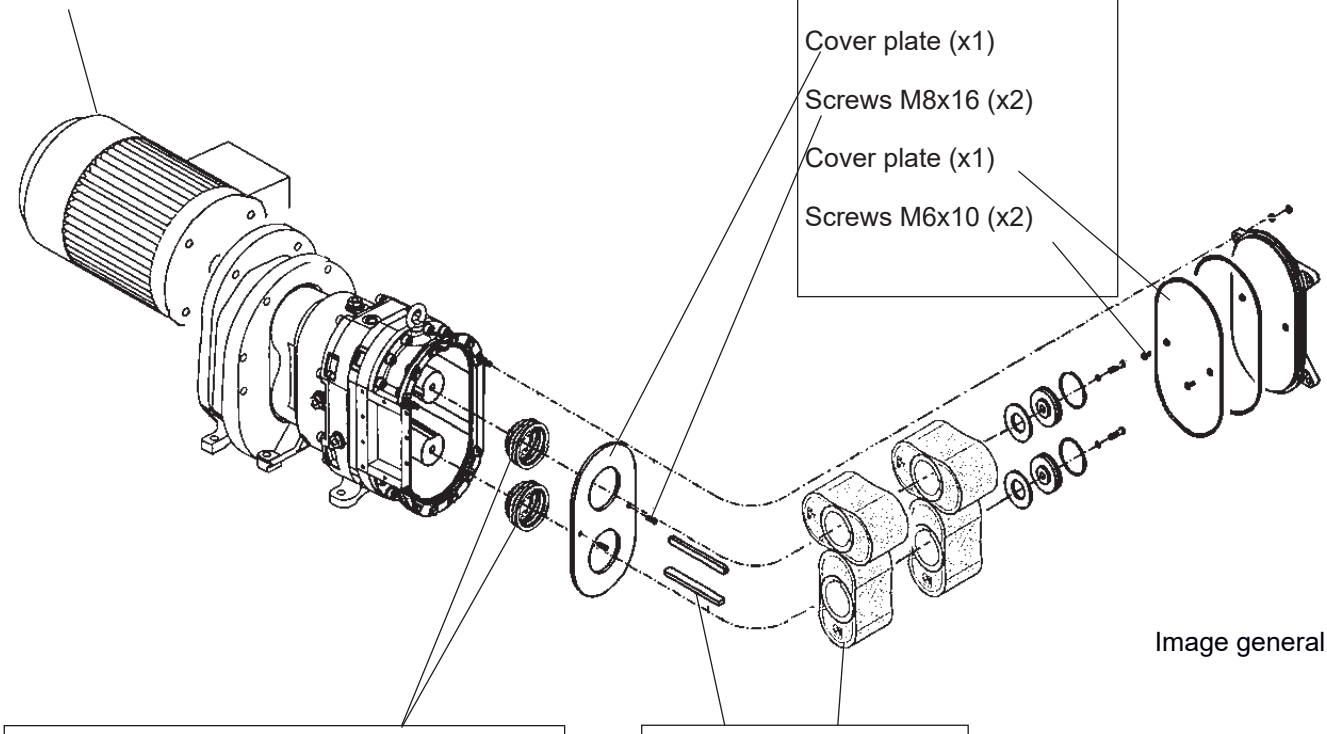

Image general

6547203
MECHANICAL SEAL KIT:
Cartridge mechanical seal (x2)
Screw M10x70 (x2)
Plug 3 mm (x2)
O-ring 188x4 (x1)
O-ring 50x3 (x2)
O-ring 16x2 (x2)

Key Lobes

6544344
LOBE EXCHANGE KIT:
Lobes (x2)
Key (x2)
O-ring 50x3 (x2)
O-ring 16x2 (x2)
O-ring 188x4 (x1)
Bolt M10x70 (x2)
Plug (x2)

EVAC reserves the right to make alterations to this specification without prior notice.
© Copyright Evac Oy. All rights reserved.