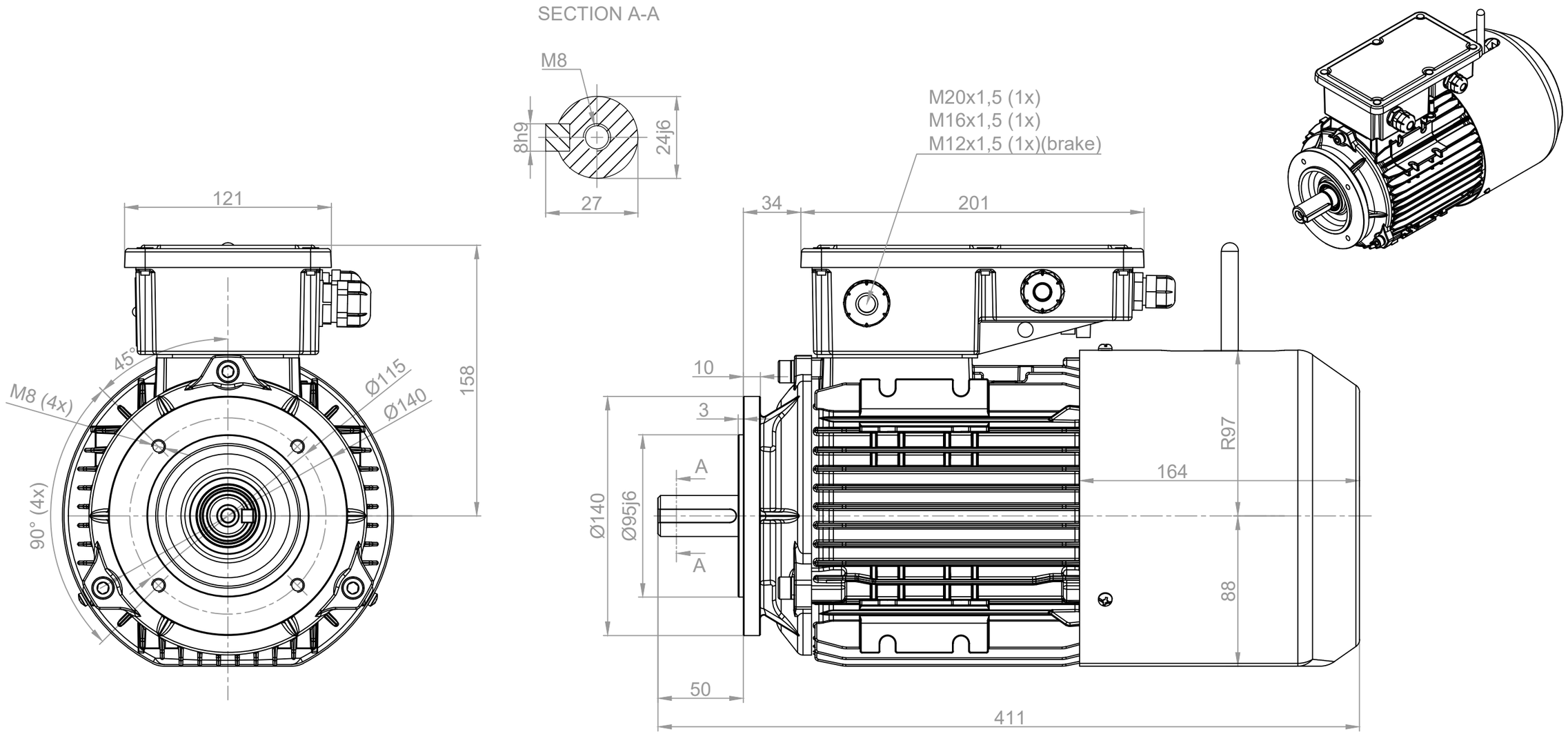

All dimensions are in mm

Motor: CANTONI MOTOR	Feet:	None	Customer:		KOLMER ELEKTROMOTOREN	Projection:
	Flange:	B14A	Quotation number:			US
Mounting possibilities:	Dimensions are valid for motor type:		Article number:		Drawn by: GH	
IM B14 V18 V19	3SIEK 90S2-HSY 3SIEK 90S8-HSY		Special remarks:		Approved by: KPo	
IM 3601 3611 3631	3SIEK 90S4-HSY 3SIEK 90L2-HSY		Motor with brake and handrelease		Date: 28-04-2023	REV. 0
	3SIEK 90S6-HSY 3SIEK 90L8-HSY				Drawing number: 1309S002625BXZ3.R0	Sheet 1/1