The copyright to this drawing belongs to us. No duplication or transfer to, providing access to or communicating to any third parties is allowed of its contents or excerpts thereof. This drawing may not be used without our approval for any purpose other than that for which it has been entrusted to the recipient. Any non-compliance shall obligate the violator to compensate for damages. In ase any patent is issued or a utility model is registered, or in case of any other industrial property rights, all such rights must be reserved for us.

BEDIA Motorentechnik GmbH & Co.KG,
Altdorf bei Nürnberg

Das Urheberrecht an dieser Zeichnung gehört uns. Vervielfältigung, Überlassung, Zugänglichkeit oder Mitteilung des Inhalts, auch auszugsweise, an Dritte ist nicht gestattet. Die Zeichnung darf ohne unsere Zustimmung, zu einem anderen Zweck als sie dem Empfänger anvertraut wird, nicht benutzt werden. Zuwiderhandlung verpflichtet zu Schadenersatz. Alle Rechte, für den Fall einer Patenterteilung, Gebrauchsmustereintrag oder anderer Schutzrechte, sind uns vorbehalten.

Technical data

Sensor-Typ:	temperature sensor (screw-in measuring resistor)
Measuring element:	Pt 1000 according to DIN 60751
Accuracy temperature range:	
-40°C to +15°C (-40°F to +59°F)	±3 K
+15°C to +125°C (+59°F to 257°F)	±1,5 K
+125°C to +150°C (+257°F to 302°F)	±3 K
Measuring current:	≤ 1 mA constant current or constant voltage
Medium:	water, coolant, oil
Mounting position:	optional
Housing material:	CuZn38Pb2; EN12164, CW608N or CuZn39Pb3; EN12164, CW614N
Mounting thread:	M14x1,5 with thread undercut DIN 3852-11-E
Sealing:	sealing ring DIN 3869 FPM80 (c)
Tightening torque:	max. 25 Nm, at μ = 0,1
Ingress protection housing:	IP67 according to DIN 40050 with mounted mating connector
Connection:	Mini-Timer connector 2,8x0,8 mm
Retention torque:	≤ 2 Nm
Medium temperature:	-40°C to +150°C (-40°F to +302°F)
Ambient temperature:	-40°C to +125°C (-40°F to +257°F)
Storage temperature:	-40°C to +125°C (-40°F to +257°F)
Weight:	approx. 35 g
Customs tariff no.:	85332100
Marking:	manufacturer; manufacturer-no.; sensor-type; year / week
Insulation resistance:	> 10 MΩ at 50 VDC (all pins connected, measured against housing)

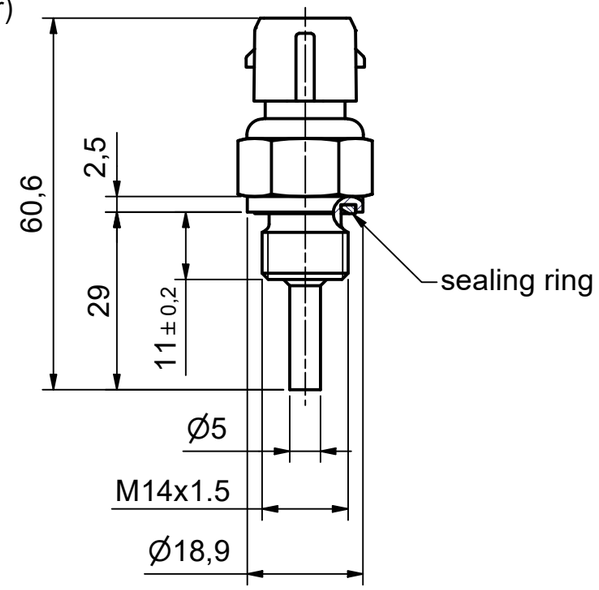

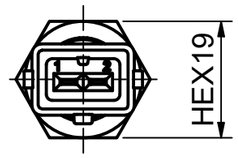

pin assignment:
1 and 2

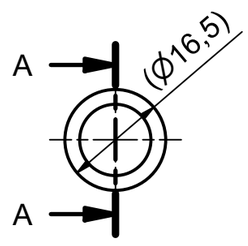

A-A

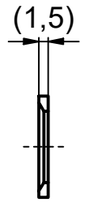

shipment is including sealing ring

Measuring shunts-basic values for screw-in resistance thermometer PT1000

temperature [°C	(°F)]	resistance [Ω]
-50	(-58)	803
-40	(-40)	843
-20	(-4)	922
-10	14	961
0	32	1000
10	50	1039
20	68	1078
30	86	1117
40	104	1155
50	122	1194
60	140	1232
70	158	1271
80	176	1309
90	194	1347
100	212	1385
110	230	1423
120	248	1461
130	266	1498
150	302	1573

Zust./ rev.	Änderung/modification	Datum/date	Name/Geprüft checked by
c	sealing ring FPM85 -> FPM80	23.09.21	MoeMi/BonPa
b	TA-2021-0003	04.03.21	TriMa/SasCh
a	sealing	21.11.08	SchAl/SasCh

Zul. Abweichung / admissible tolerance: ISO2768-mK
Oberfläche / surface: -

	Datum / date	Name / name
Erstellt / created by	10.06.2008	MoeMi
Geprüft / checked by	12.06.2008	StaRo

Format / Size: A3
Maßeinheit / dimension unit in [mm]

Maßstab / scale: 1 : 1
Sprache / language: ENU
Blatt sheet: 1 /1

Benennung / description:
Screw-in resistance thermometer
with Mini-Timer (blade terminal 2.8x0.8)

Zeichnungsnummer / drawing number: 422341
Zng. Art/ drw.type: DRC